济宁康推机电设备有限公司
Jining Kangtui Electromechanical Equipment Co., Ltd.

TCS83-635 TCS83-762

• 农机履带规格 •

Specifications of Agricultural Machinery Tracks

技术参数 Technical Parameters		
产品型号 Product Mode	TCS83-762	TCS83-635
配套机型 Matching Model	180-240马力拖拉机 180-240 HP Tractor	
长 Length	2400mm	2400mm
宽 Width	762mm	747mm
高 Height	1385mm	1385mm
履带宽度 Track width	762mm	635mm
接地面积 Ground Contact Area	1.52㎡	1.82㎡
重量 Weight,	1755kg（单个） (PerUnit)	1665kg（单个） (PerUnit)
外形尺寸 Overall dimensions	2400×1385×762 (mm)	2400×1385×747 (mm)
性能特点 Performance Characteristics		
★最高车速40km/h Maximum speed: 40 km/h		
★减小车辆接地比压，提高车辆通过性 Reduce the ground pressure of the vehicle and improve its trafficability.		
★保护耕地，防止土地板结，助力绿色农业 Protect cultivated land, prevent soil compaction, and support green agriculture.		
★百分百免维护支重轮和张紧轮毂、驱动轴 100% maintenance-free support rollers, tension hubs and drive shafts.		
★降低油耗10%—30%，技能环保 Reduce fuel consumption by 10%–30%, energy-saving and environmentally friendly.		
★配备蓄能器自调节液压张紧系统 Equipped with accumulator self-adjusting hydraulic tensioning system.		

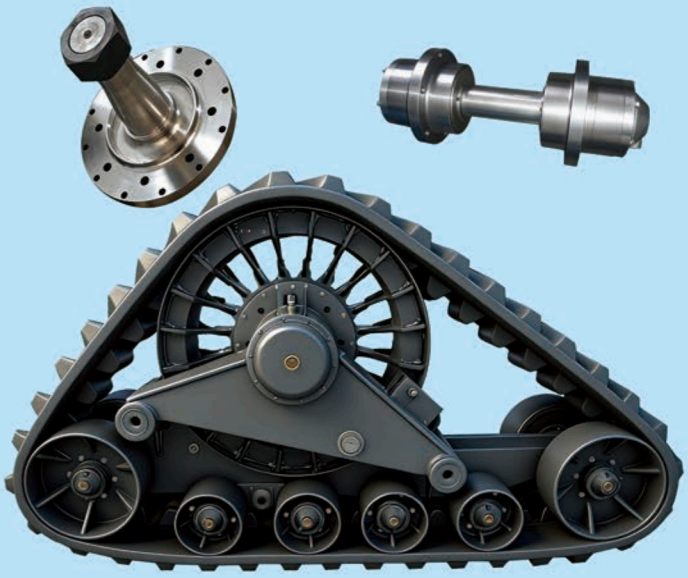

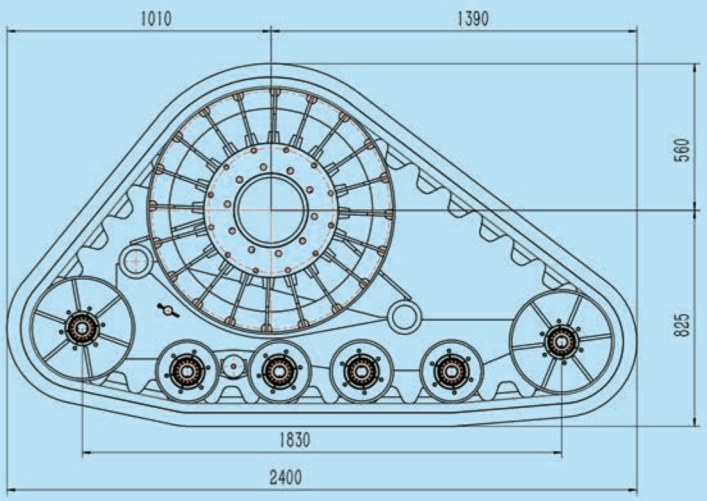

地　　址：山东省济宁市高新区杨家河创业园C区
公司官网：https://kangtui.en.alibaba.com
联 系 人：张广良
电话及 WhatsApp：+8618660707027
电子邮箱：zgliang3333@gmail.com

Address: District C, Yangjiahe Pioneer Park, High-tech Zone, Jining City, Shandong Province
Company Website: https://kangtui.en.alibaba.com
Contact Person: Guangliang Zhang
Tel & WhatsApp: +8618660707027
Email: zgliang3333@gmail.com

纵使泥泞坎坷，掘鑫履带伴你一路前行

Through mud and rough terrain, our track systems keep you moving